AVC-NDB81M AI

NDAA COMPLIANT | CE | FC

8MP H.265 MOTORIZED BULLET NETWORK CAMERA
Active Deterrence 24/7 Color

OVERVIEW

- 8MP (3840x2160) H.265+/H.264+/MJPEG
- Max. resolution: 3840x2160
- Full Color / Active Deterrence Camera
- 2.8-12mm Motorized Lens (F1.2)
- 3D DNR, WDR, HLC, BLC, ROI encoding
- Intelligent Analytics
- White Light LED / Strobe (Blue & Red) Light
- Built-in MIC / Speaker
- Built-in micro SD card slot, up to 256GB
- IP67 ingress protection
- DC12V/PoE power supply
- Support remote monitoring by AVYCON ONE (Mobile APP) and AVYCON CMSONE (CMS)

DIMENSIONS

Unit : inch(mm)

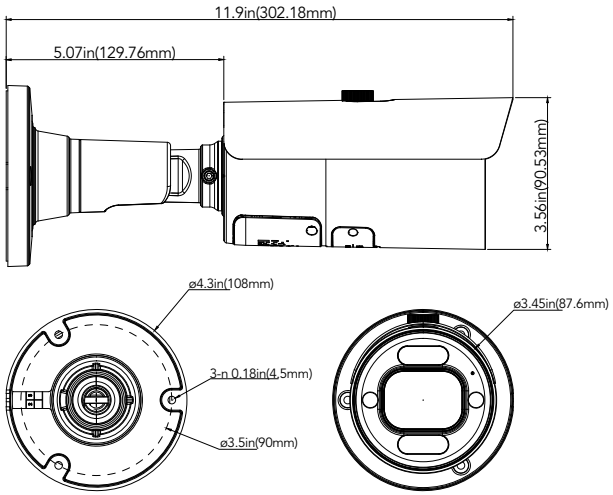

OPTIONAL ACCESSORIES

AVM-JB-BE-L1
JUNCTION BOX

AVM-JB-BE-S2
JUNCTION BOX

AVM-HWM-E-L1
WALL MOUNT
WITH JUNCTION BOX

AVM-HCM-E-L1
CEILING MOUNT
WITH JUNCTION BOX

AVM-CRM-A1
CORNER
MOUNT BRACKET

AVM-P-POM-A2
POLE
MOUNT BRACKET

AVM_JB_DUAL_UL1
DUAL JUNCTION BOX

Copyright © 2024 AVYCON. All rights reserved.

AVYCON www.avycon.com

All the contents on the AVYCON's digital and printed marketing materials include product names, part number, unique identification letters, etc., are trademarks of AVYCON. Any unauthorized use or distribution of trademarked contents is strictly prohibited by law. In addition, graphical designs, images, features, and specifications on such materials may differ from the actual products and subject to change without notice. For the latest product information/specification please visit our website or contact one of our product specialists at marketing@avycon.com

SPECIFICATIONS

VIDEO	
Imaging Device	1/2.8"
Effective Pixels	8MP 3840(H) × 2160(V)
Scanning System	Progressive CMOS
Min. Illumination	Color 0.007 lux @ F1.0 (AGC ON); B/W 0 lux @ IR ON
LENS TYPE	
Focal Length (Zoom Ratio)	2.8-12mm
Max. Aperture Ratio	F No. 1.2
Angular Field of View	H: 107(W)-34(T)°, V: 56(W)-19(T)°, D: 129(W)-39(T)°
Min. Object Distance	1.5m
Lens Type	Ø16.7
OPERATIONAL	
IR LED	2
WarmLight	2
Red Blue Light	2 (1 Red & 1 Blue)
IR Viewable Length	Up to 82ft (25m)
WarmLight Viewable Length	Up to 65ft (20m)
Type of complementary light	Default warm light, switchable infrared light
Motion Detection	Off/On (8 Level)
Wide Dynamic Range	WDR
Digital Noise Reduction	3D DNR
Image Setting	Full Color Mode / Day & Night Mode / Smart Illumination
White Balance	Auto / Manual
Electronic Shutter Speed	1/5 ~ 1/20000s
On-Board Storage	Micro SD slot, up to 256GB
Alarm	NA
Alarm Event	Warning Light, Siren, E-mail Notification, Event Push, FTP Picture Upload, Micro SD recording
Audio	Built-in microphone & Speaker
Custom Voice	Yes
Hardware Reset	Yes
Smart Feature	Face Recognition, Pedestrian & Vehicle, Perimeter Intrusion, Line Crossing, Object Detection, Crossing Counting, Heat Map, Crowd Density, Queue Length, License Plate, Rare Sound, Intrusion, Region Entrance, Region Exiting
NETWORK	
Ethernet	RJ45 (10/100BASE-T)
Video Compression Format	H.265/H.264
Resolution	Main Stream @30fps: 8MP(3840x2160), 5MP(2592x1944, 3072x1728), 4MP(2592x1520), 3MP(2304x1296), 1080P(1920x1080), 960P(1280x960), 720P(1280x720) Sub Stream @30fps: 720P(1280x720), VGA(640x480), QVGA(320x240) Mobile Stream @30fps: VGA(640x480), QVGA(320x240)
Video Quality Adjustment	256Kbps ~ 16Mbps
Bitrate control method	CBR/VBR
IP	IPv6
Protocol	TCP/IP, HTTP, DHCP, DNS, DDNS, RTP/RTSP, SMTP, NTP, UPnP, SNMP, HTTPS, FTP, RTMP (v8.2.3 firmware and above)
Security	IP address filter; complicated password; Authenticated username and password
Application Programming Interface	ONVIF (Profile S/G/T/M)
Web Viewer	IE10/11, Safari V12.1 above, Firefox V.52 above, Google chrome V.57 above, Edge V.79 above
ENVIRONMENTAL	
Operating Conditions	-31～+140°F (-35～+60°C) / less than ° 90% RH
Ingress Protection	IP67
ELECTRICAL	
Input Voltage / Current	D12V/POE (IEEE802.3af)
Power Consumption	DC12V: max 7.1W; POE (48V): max 9.2W
MECHANICAL	
Material	Metal

Copyright © 2024 AVYCON. All rights reserved.

All the contents on the AVYCON's digital and printed marketing materials include product names, part number, unique identification letters, etc., are trademarks of AVYCON. Any unauthorized use or distribution of trademarked contents is strictly prohibited by law. In addition, graphical designs, images, features, and specifications on such materials may differ from the actual products and subject to change without notice. For the latest product information/specification please visit our website or contact one of our product specialists at marketing@avycon.com